GARD GT
Road Barrier

Product guide

October 2020

Rev. 01

Copyright 2020 CAME S.p.A.
All rights reserved

CAME

CAME.COM

GARD GT

The new “Access Automation” barriers

BARRIER GARD GT4
Up to 4 m clearance

BARRIER GARD GT8
Up to 7,8 m clearance

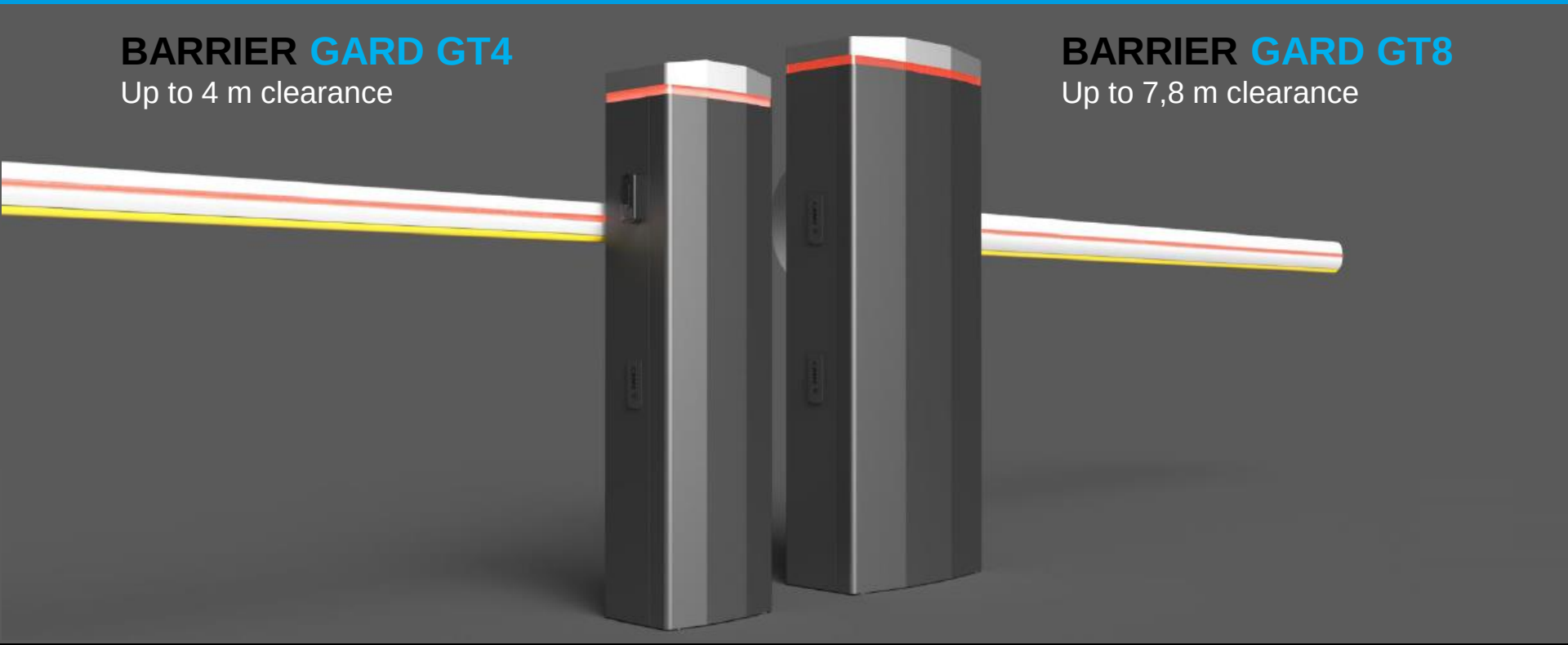

Copyright 2020 CAME S.p.A. – All rights reserved

INDEX

1 Introduction to GARD GT range

2 GARD GT4 - GT8 value proposition

3 GARD GT accessories

4 Price list

5 Line-up benchmark

6 Marketing Tools

7

8

Copyright 2020 CAME S.p.A. – All rights reserved

BARRIER GARD GT

The road barrier designed to integrate perfectly in any context.

A slight chassis design enriched with high brightness **LED traffic lights** improves the level of perception and control.
GT range is made of **galvanized and painted steel** (RAL 7024 wrinkled) with accessories predisposition.
It is also available in **Stainless Steel** version (Satin finished) or **Customised painting** versions (RAL Custom).

With a clear passage up to **4 meters for the GT4** model and up to **7.8 meters for the GT8** model, the new GARD GTs are the ideal solution for residential, tertiary or industrial context.

The **new advanced electronics** offers several control options.
GARD GT is **fully settable and remotely controlled** through the platform CAME Connect. CAME gateway Wi-Fi slot is available to connect the GT to Wi-Fi network and enjoy the wide range of functionality offered by the platform.
A **native serial port with Modbus protocol** is also available, providing an Ethernet interface for advanced third-party system integration, such as access control or parking systems.

A wide range of accessories completes the range, like the new **full-height skirt** up to 1.3 meters, perfect to prevent unauthorized access to vehicles, or pedestrians and safety accessories, like **Laser Safety Sensors CAT 2** or new devices compatible with **CAME CXN bus system.**

Copyright 2020 CAME S.p.A. – All rights reserved

BARRIERS GARD GT

The **GARD GT** series is tested to be compliant with **European Norms** on impact forces. Standards EN 12453 specify the compliance and safety requirements for automatic closing systems that could be in contact with people. They define all of the technical solutions for securing users' systems.

The 24 V DC gear-motor with **encoder** and the new control board with **Automatic Speed Control** grant an easy management of the forces applied.

To satisfy the most exigent cases, the control board also offers safety test for inputs that allow the use of safety devices such as laser sensors or other similar equipment EN ISO 13849-1 (Pl "d" CAT 2); EN 12978; EN 12453 (Device E).

EN TESTED

This product is tested in conformity with EUROPEAN NORMS on impact forces

Copyright 2020 CAME S.p.A. – All rights reserved

BARRIERS GARD GT

The new **GARD GT** series features an **innovative hi-tech firmware** for movement control, which reduces all potential malfunctions **automatically managing the speed** of the motor based on the boom position. The installer only sets the basic parameters requested during startup, such as the length of the boom and the first calibration. The **firmware measures and adapts constantly** the speed and the deceleration at each cycle thanks to the feed-back provided by the encoder.

Smooth movement and adaptive deceleration

Improved obstacle detection

Greater durability for the product

Copyright 2020 CAME S.p.A. – All rights reserved

BARRIER GARD GT: Macro specifications

Visual concept:

Technical data	
Max clear passage (m)	GT4 **4m** – GT8 **7,8m**
Opening time	GT4 **2-4 s.**/GT8 **4-8 s.**
Power supply (V)	120 or 230 AC
Temperature (°C)	-20 ÷ +55
Duty cycle	Intensive use

Two Platforms:

- GT4 platform from 2,5m to 4m
- GT8 platform from 4m to 7,8m

Main product features:

- **New slight** design
- Galvanized and painted Steel or Stainless steel **chassis**
- Predisposition for **integrated LED** crown and all accessories
- All versions **24Vdc with encoder**
- **Control board** positioned on the top of the barrier
- Single type of **balancing red spring** included
- **New booms** ready for green/red strip led
- **Articulated Joint boom** for low ceiling on GT4
- **Battery** backup system
- **Breakaway** boom fastening on GT4/GT8
- **New skirts** standard and with upper option
- **Retrofit** with GARD 4 / GARD 8 series
- **EN Tested** compliant with impact forces
- **Colour RAL 7024** *wrinkled*

Copyright 2020 CAME S.p.A. – All rights reserved

GARD GT RANGE

How to read the commercial code

Example:

SAP Code	Description SAP
803BB-0160	GGT40AGS GARD GT4 BARR 230V 24V

1-DIGIT	2-DIGIT	3-DIGIT	4-DIGIT	5-DIGIT	6-DIGIT	7-DIGIT	8-DIGIT
SERIES NAME			**ARM dm**		**POWER/KIT**	**COLOR**	**VARIANT**
G	P	T	4	0	D= 24V	B=BLUE	F=FAST
G	P	X	4	0	A= 230V	W=WHITE	T=TALL
G	G	T	4	0	T=400V	N=BROWN	S= STANDARD
G	G	T	8	0	R=120V	K=BLACK	P= PARKARE
					K = KIT	Y=YELLOW	C=COOLER
					M=120/230 V	G=GREY	L=IRREVERSIBLE
						R=RED	6=AISI316
						E=GREEN	4=AISI304
						O=ORANGE	B=BRAZIL
						C= CUSTOM	430=AISI430
						X = STAINLESS	

Copyright 2020 CAME S.p.A. – All rights reserved

GARD GT RANGE

Barriers Phase in
SKU’s

SAP Code	Description SAP	Characteristics
803BB-0160	**GGT40AGS** GARD GT4 BARR **230V** 24V	Automatic barrier with irreversible gear-motor 24Vdc with encoder; galvanized and painted steel cabinet with accessories predisposition. Balancing spring included.
803BB-0180	**GGT80AGS** GARD GT8 BARR **230**V 24V	Automatic barrier with irreversible gear-motor 24Vdc with encoder; galvanized and painted steel cabinet with accessories predisposition. Balancing springs included.
803BB-0200	**GGT40RGS** GARD GT4 BARR **120**V 24V	Automatic barrier with irreversible gear-motor 24Vdc with encoder; galvanized and painted steel cabinet with accessories predisposition. Balancing spring included.
803BB-0220	**GGT80RGS** GARD GT8 BARR **120**V 24V	Automatic barrier with irreversible gear-motor 24Vdc with encoder; galvanized and painted steel cabinet with accessories predisposition. Balancing springs included.

Copyright 2020 CAME S.p.A. – All rights reserved

GARD GT RANGE

Barriers Phase in: Models with stainless steel cabinet
MTO

SAP Code	Description SAP	Characteristics
803BB-0240	**GGT40AX4** GARD GT4 BARR 230V 24V SS4	Automatic barrier with irreversible gear-motor 24Vdc with encoder; AISI 304 satin steel cabinet with accessories predisposition. Balancing spring included.
803BB-0250	**GGT80AX4** GARD GT8 BARR 230V 24V SS4	Automatic barrier with irreversible gear-motor 24Vdc motor with encoder; AISI 304 satin steel cabinet with accessories predisposition. Balancing springs included.
803BB-0260	**GGT40AX6** GARD GT4 BARR 230V 24V SS6	Automatic barrier with irreversible gear-motor 24Vdc with encoder; AISI 316 satin steel cabinet with accessories predisposition. Balancing spring included.
803BB-0270	**GGT80AX6** GARD GT8 BARR 230V 24V SS6	Automatic barrier with irreversible gear-motor 24Vdc with encoder; AISI 316 satin steel cabinet with accessories predisposition. Balancing springs included.
803BB-0300	**GGT40RX4** GARD GT4 BARR 120V 24V SS4	Automatic barrier with irreversible gear-motor 24Vdc with encoder; AISI 304 satin steel cabinet with accessories predisposition. Balancing spring included.

Copyright 2020 CAME S.p.A. – All rights reserved

GARD GT RANGE

Barriers Phase in: Models Powder Coated RAL Custom
MTO

SAP Code	Description SAP	Characteristics
803BB-0280	**GGT40ACS** GARD GT4 BARR 230V 24V RALX	Automatic barrier with irreversible gear-motor 24Vdc with encoder; galvanized and painted customized RAL steel cabinet with accessories predisposition. Balancing spring included.
803BB-0290	**GGT80ACS** GARD GT8 BARR 230V 24V RALX	Automatic barrier with irreversible gear-motor 24Vdc with encoder; galvanized and painted customized RAL steel cabinet with accessories predisposition. Balancing springs included.

REQUEST FOR BARRIERS WITH "CUSTOM" PAINTING:

- Only custom painting with "RAL" colors is provided.
- Delivery time is 8-10 weeks.
- "CUSTOM" painting is intended for the cabinet and door only. The top cap and plastic covers painting is not provided.
- For technical reasons, the paint finish is always the same as the standard model.

Copyright 2020 CAME S.p.A. – All rights reserved

INDEX

1 Introduction to GARD GT range

2 GARD GT4 - GT8 value proposition

3 GARD GT accessories

4 Price list

5 Line-up benchmark

6 Marketing Tools

7

8

Copyright 2020 CAME S.p.A. – All rights reserved

BARRIER GARD GT4 VALUE PROPOSITION

Application field, mechanical characteristics and new functionalities

- Application from **2,5 m up to 4 m** clearance
- Design for **Heavy Duty cycle.**
- Models with power supply **230Vac or 120Vac** versions.
- New **24Vdc motor with encoder** with heavy duty brushes.
- **Compliant with EN standards**: the GARD GT can easily pass successfully the impact tests.
- Great durability **MCBF up to 3 millions**.
- Opening **Speed: 2-4 secs.** with 2 to 4-meter boom.
- Multifunction control board with **Digital inputs and CXN BUS input**.
- **CAME Connect Ready** electronics and **CAME KEY slot** for smart setup
- Boom and Crown **Red/Green LED** integration for traffic flows control.
- Manages **up to 250 users** with RFID card, or digital code, or transmitters.
- New accessories and **full height skirt** (upside/downside) available.

Copyright 2020 CAME S.p.A. – All rights reserved

BARRIER GARD GT4: Product layout

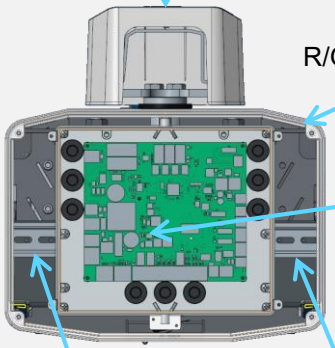

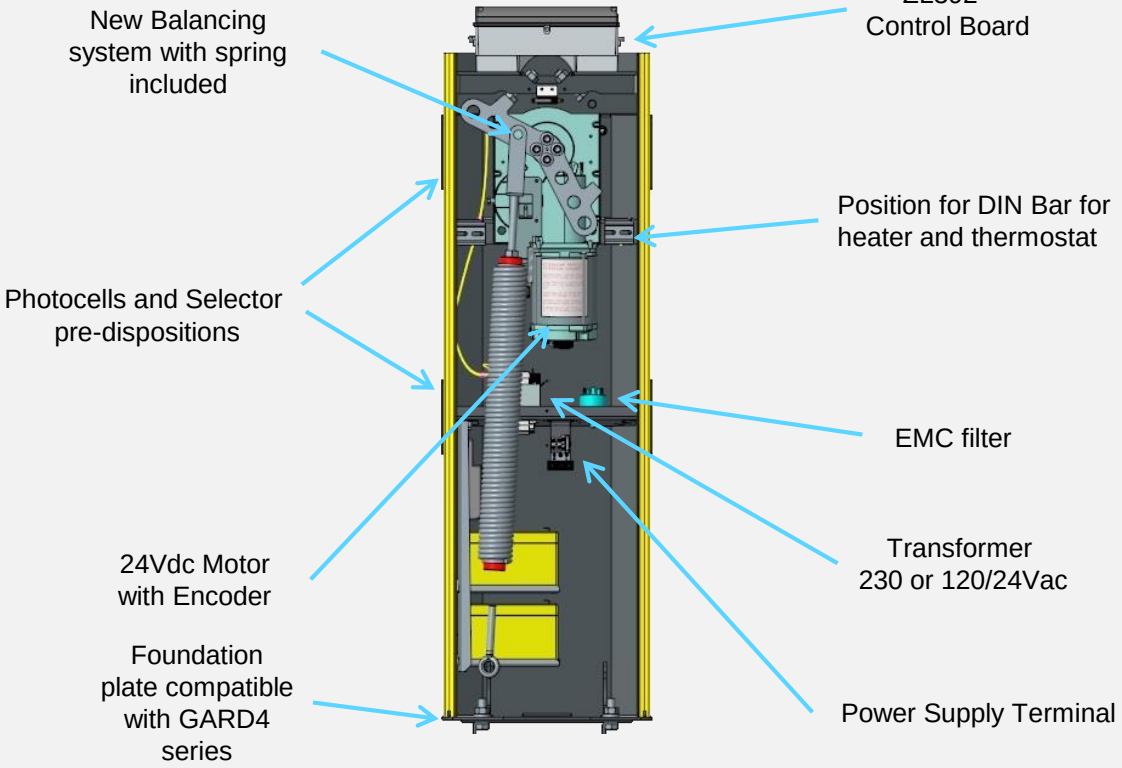

Copyright 2020 CAME S.p.A. – All rights reserved

BARRIER GARD GT4: New balancing system

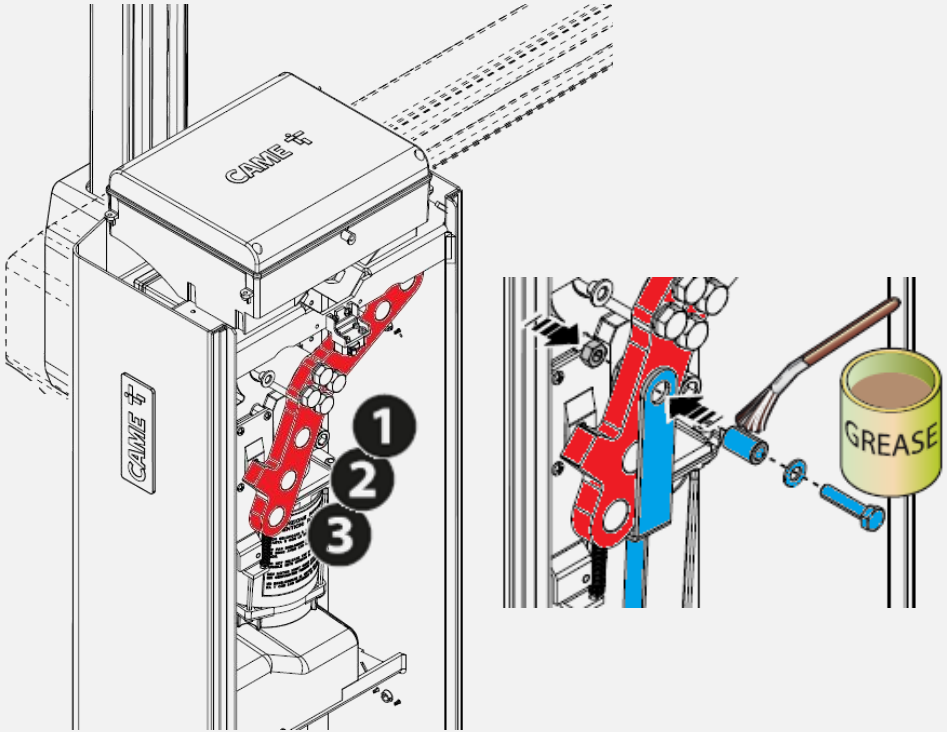

NEW

New balancing System

The new balancing system allows the use of single spring model, already included with the barrier. The balancing spring changes positions on the lever depending the length and weight applied.

Benefits:

- Avoid mistakes on spring selection.
- Decrease the stock due to different spring models.
- Allows configuration changes without balancing limits.
- Reduce the No. of items to be considered for sales

Easy to Choose / Easy to Sell

Copyright 2020 CAME S.p.A. – All rights reserved

BARRIER GARD GT8 VALUE PROPOSITION

Application field, mechanical characteristics and new functionalities

- Application from **4 m up to 7,8 m** clearance
- Design for **Heavy Duty cycle.**
- Models with power supply **230Vac or 120Vac** versions.
- New **24Vdc motor with encoder** with heavy duty brushes.
- **Compliant with EN standards**: the GARD GT can easily pass successfully the impact tests.
- Great durability **MCBF up to 3 millions**.
- Opening **Speed: 4-8 secs.** with 4 to 8-meter boom.
- Multifunction control board with **Digital inputs and CXN BUS input**.
- **CAME Connect Ready** electronics and **CAME KEY slot** for smart setup
- Boom and Crown **Red/Green LED** integration for traffic flows control.
- Manages **up to 250 users** with RFID card, or digital code, or transmitters.
- New accessories and **full height skirt** (upside/downside) available.

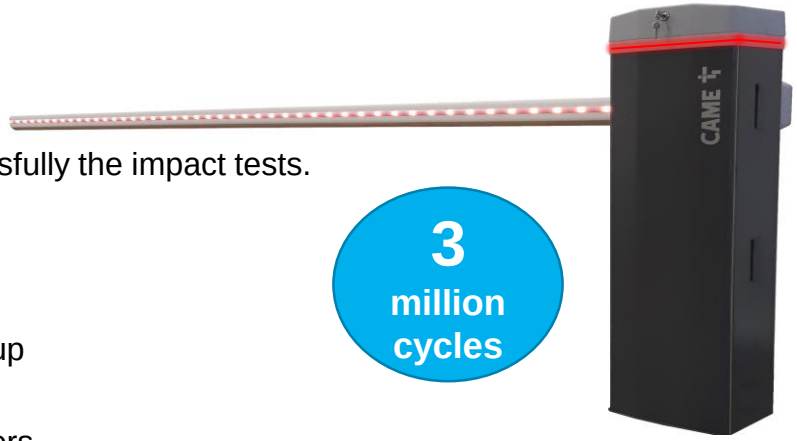

Copyright 2020 CAME S.p.A. – All rights reserved

BARRIER GARD GT8: Product layout

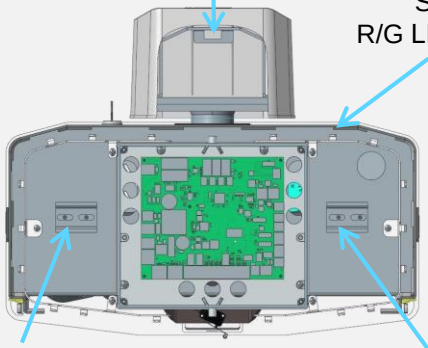

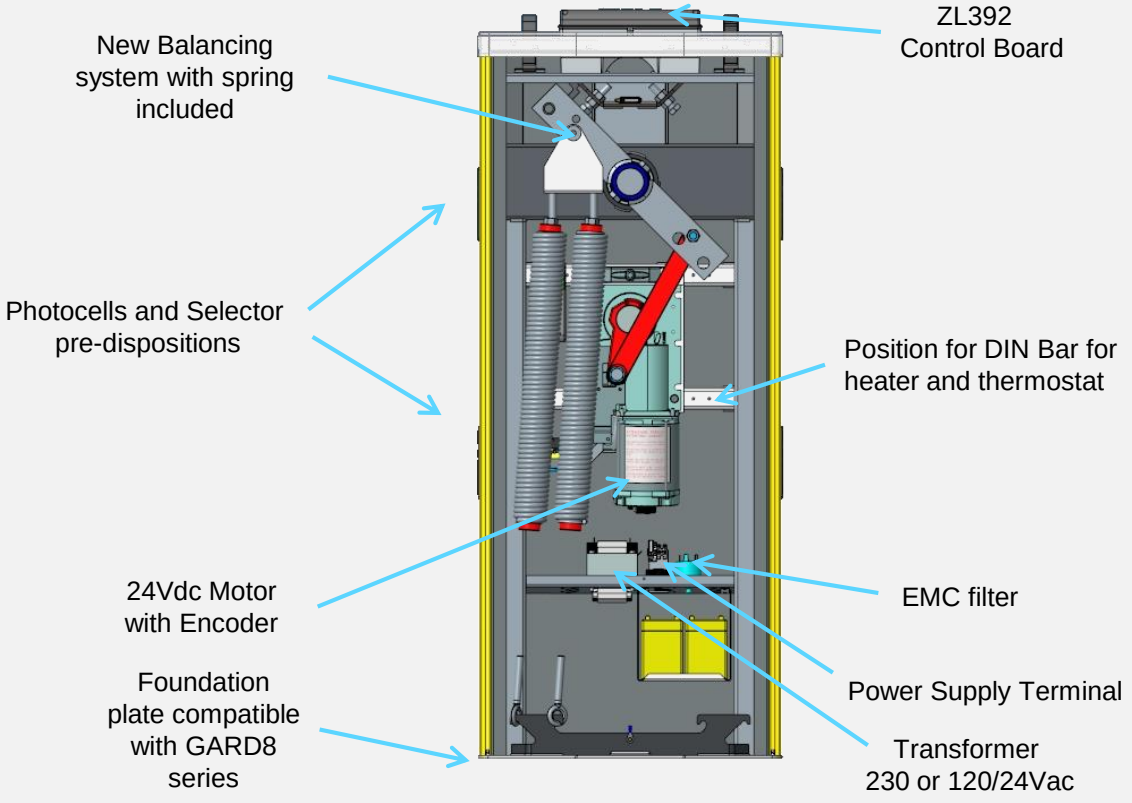

Copyright 2020 CAME S.p.A. – All rights reserved

BARRIER GARD GT8: New balancing system

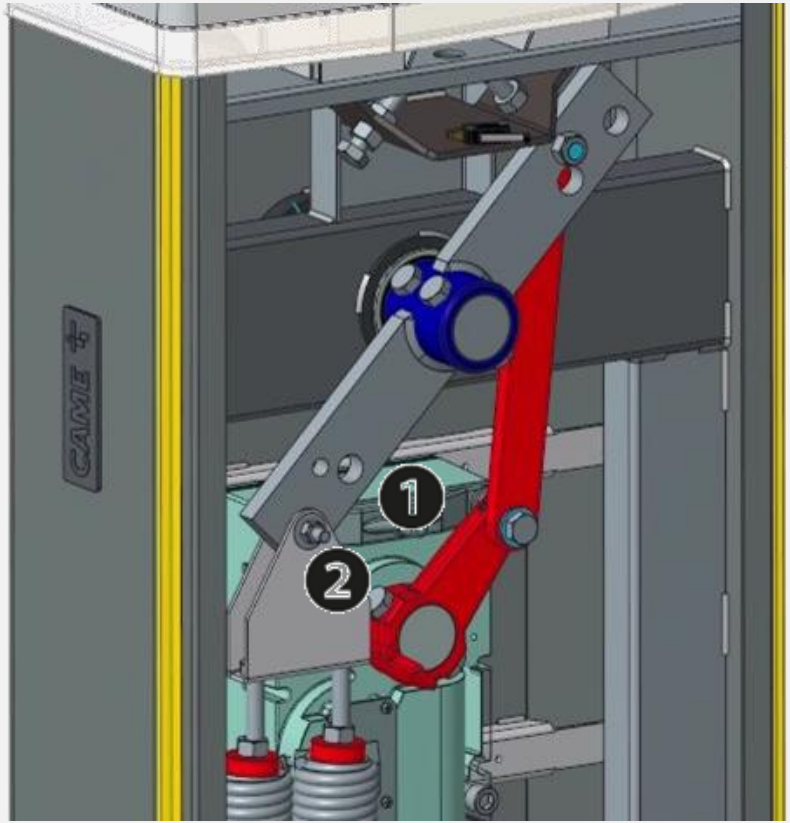

NEW

New balancing System

The new balancing system allows the use of single spring model (two pcs.), already included with the barrier. The balancing springs changes positions on the lever depending the length and weight applied.

Benefits:

- Avoid mistakes on spring selection.
- Decrease the stock of different springs.
- Allows configuration changes without balancing limits.
- Reduce the No. of items to be considered for sales

Easy to Choose / Easy to Sell

Copyright 2020 CAME S.p.A. – All rights reserved

BARRIER GARD GT: ZL392 unit hardware

NEW New hardware Vs. old models

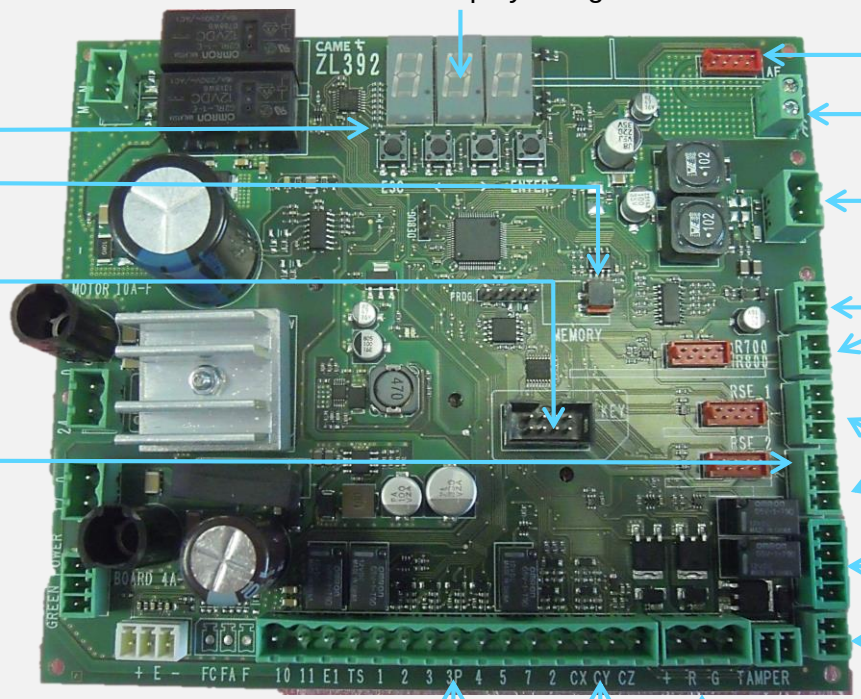

Function Display 7 segments

Programming keys

Memory roll Backup card

Terminal for
CAME KEY
CAME Gateway Wi-Fi

Terminal for Bridge
Modbus TCP

Command inputs

Safety inputs NC/Resistive configurable

Socket AF43S/AF868 for fixed and rolling codes (250 users)

Antenna connection

CXN Bus input

R800/R700 card for direct connection to keypad or RFID readers

Double RSE port for CAME Connect and Paired/Interlock barriers

Boom status output (PKR)

Electro-block output

R/G LED output

Copyright 2020 CAME S.p.A. – All rights reserved

BARRIER GARD GT: ZL392 unit hardware

CAME KEY – Gateway Wi-Fi port: allows the use of Came Key and Wi-Fi gateway.
Modbus serial port: allows the use of TCP bridge for system integrators.

NEW

Terminal for
CAME KEY
CAME Gateway Wi-Fi

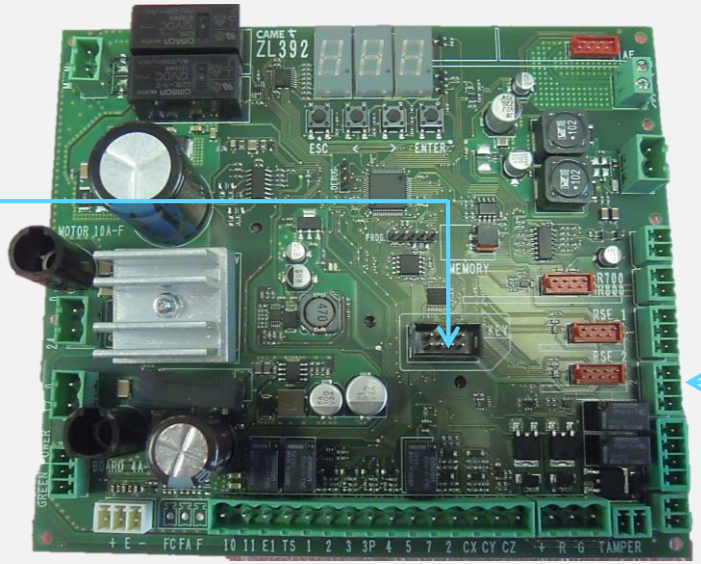

Terminal for Bridge
Modbus TCP

Copyright 2020 CAME S.p.A. – All rights reserved

BARRIER GARD GT: ZL392 unit hardware

Safety inputs resistive: allows the use of safety edges without additional interface.
R/G output: allows the use Strip Led red/green.
Electro-block output: allows the use of magnetic lock at the top of the boom.
Double RSE port: allows simultaneously the use of CAME Connect and also paired or interlocked barriers.

NEW

Double RSE port for CAME Connect and Paired/Interlock barriers

Electro-block output

R/G LED output

Safety inputs NC/Resistive configurable

Copyright 2020 CAME S.p.A. – All rights reserved

BARRIER GARD GT: ZL392 unit hardware

CAME CXN – BUS PORT

NEW

The **GARD GT** series features native **CXN BUS port** for Bus accessories.

The BUS CXN system is a **non-polarized 2-wire BUS** that allows an extremely **easy wiring** among all compatible CAME accessories. By the control board, the system allows you to have a complete diagnosis of all the configured accessories, uniquely identifying the device to be replaced.

The BUS CXN will support **command devices, photocells, safety devices, flashing lights.**
The connection to the bus is very versatile and can be **Line, Star or Mixed.**

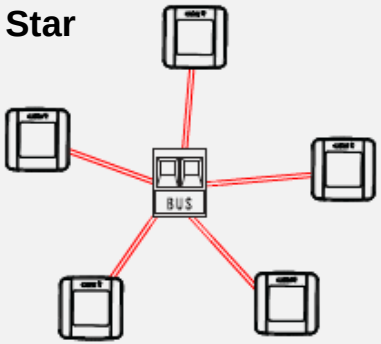

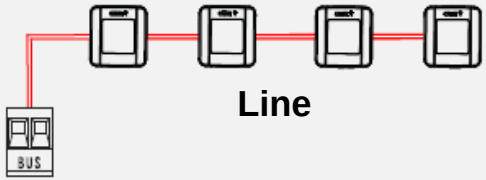

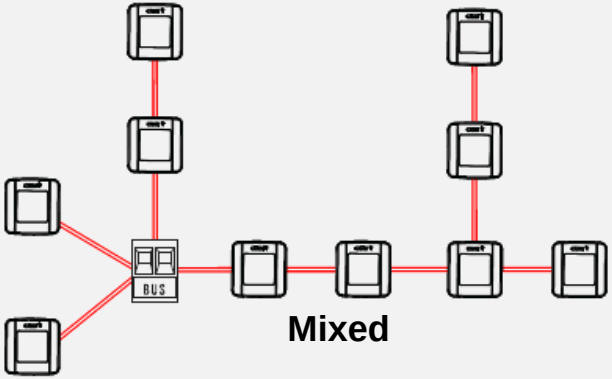

Copyright 2020 CAME S.p.A. – All rights reserved

BARRIER GARD GT: ZL392 unit functions 1/2

The **ZL392 board** offers a considerable number of functionalities Vs. previous control board models Zl39EX, ZL39, ZL38.

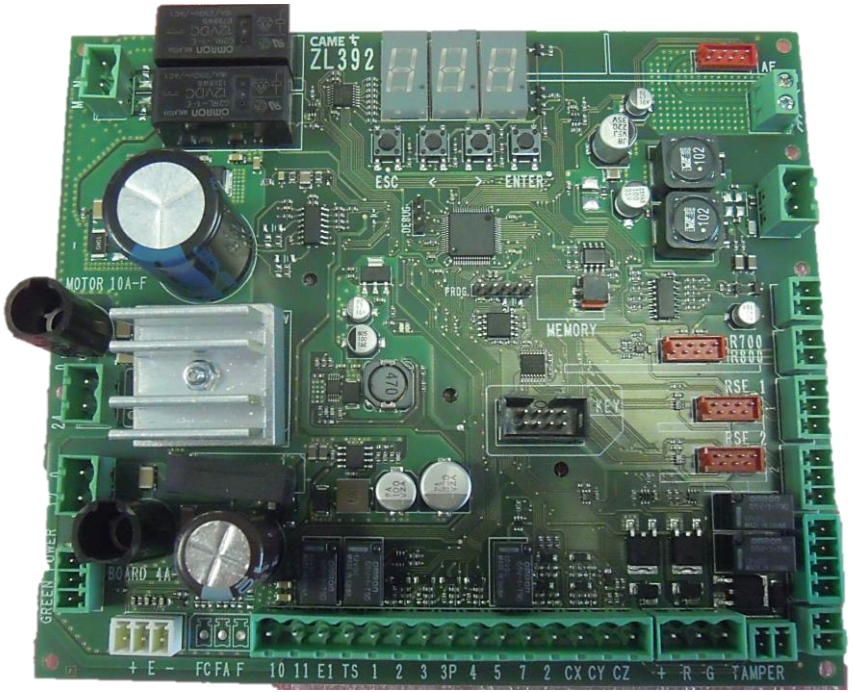

Function Menu	GARD GT ZL392	GARD-EZ/ZT ZL39EX	GARD-E ZL39	GARD-Z ZL38	Comments
F1 Total Stop	•	•	•	•	Dip Switch On ZL38
F2 Settable Input CX	•	•	•	-	Not configurable on ZL38
F2 Settable Input CY	•	•	•	-	Not configurable on ZL38
F2 Settable Input CZ	•	-	-	-	Not configurable on ZL38
F5 Safety Test on Inputs	•	•	•	-	
F6 Hold to Run function	•	•	•	•	Dip Switch On ZL38
F9 Obstacle on safety Inputs	•	•	•	•	Dip Switch On ZL38
F10 Settable Signaling Lamp output	•	•	•	-	Fix on ZL38
F11 exclude encoder use microswitch	•	•	•	-	Board used as spare only
F14 Sensor Type	•	•	•	-	
F15 White LED Cord setting	R/G	•	•	•	R/G Strip Led on GT
F17 Electroblock output	•	-	-	-	
F18 Output E/E1	•	•	•	•	
F19 Auto closing time	•	•	•	•	
F21 Pre-Flashing time	•	•	•	-	Fix on ZL38
F25 Courtesy Light output time	•	•	•	-	
F28 Opening Speed	•	•	•	-	
F29 Closing Speed	•	•	•	-	
F30 Slowdown speed closing	Automatic	•	•	-	Automatic setting on GT
F33 Calibration speeed	Automatic	•	•	-	Automatic setting on GT
F31 Slow-down speeed opening	Automatic	•	•	-	Automatic setting on GT
F34 Travel Sensitivity	•	•	•	•	
F35 Slow-down sensitivity	Automatic	•	•	-	Automatic setting on GT
F37 Opening Slow-down point	Automatic	•	•	-	Automatic setting on GT
F38 Opening Slow-down point	Automatic	•	•	-	Automatic setting on GT

Copyright 2020 CAME S.p.A. – All rights reserved

BARRIER GARD GT: ZL392 unit functions 2/2

The **ZL392 board** offers a considerable number of functionalities Vs. previous control board models Zl39EX, ZL39, ZL38.

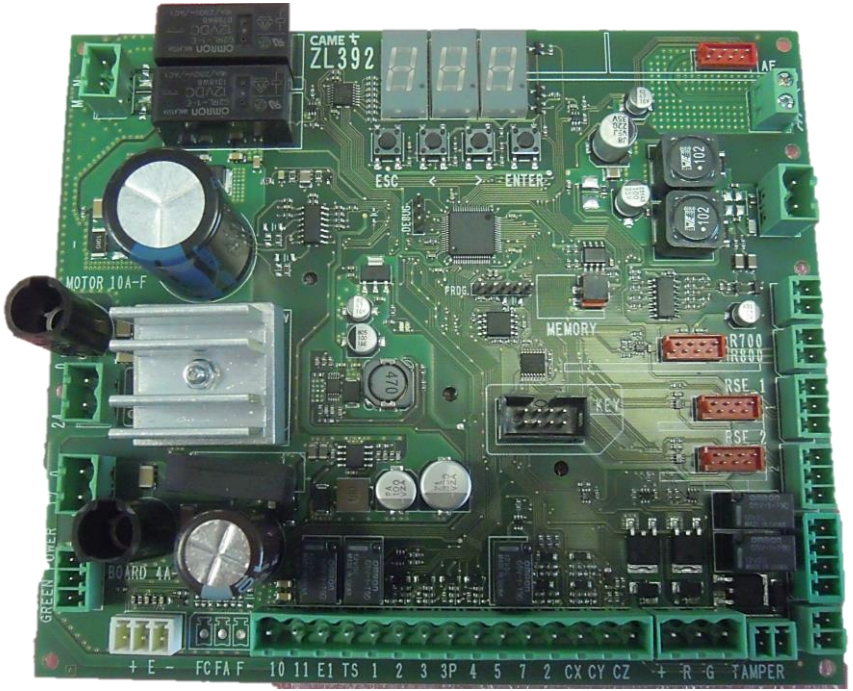

Function Menu	GARD GT ZL392	GARD-EZ/ZT ZL39EX	GARD-E ZL39	GARD-Z ZL38	Comments
F49 RSE1 RSE2 serial ports	•	•	•	-	
F50 Data saving Memory Roll	•	•	•	-	
F51 Data reading from Memory Roll	•	•	•	-	
F52 Parameters transfer MASTER-SLAVE	•	•	•	-	
F54 Opening direction left/right	•	-	-	-	
F56 CRP ID	•	•	-	-	
F58 Maintenance setting	•	-	-	-	
F60 Sleep Mode	-	•	•	-	
F61 Pre-Flashing open/close/open-close	•	•	•	-	
F63 Speed RSE1 RSE2	•	•	-	-	
F70 Aux. Output Feedback FCA FCC	•	•	-	-	PKR Board
F75 Opening Counter	•	-	-	-	
F93 Battery working mode	•	-	-	-	
U1 New user	•	•	•	-	
U2 Remove user	•	•	•	-	
U3 Remove all users	•	•	•	-	
U4 Radio coding	•	•	-	-	
U8 Self-Learning Rolling code Transmitters	•	-	-	-	
A1 Boom Lenght	•	•	•	-	
A2 Motor Test	•	•	•	-	
A3 Travel Calibration	•	•	•	-	
A4 Reset parameters	•	•	•	-	
A5 Manouvre Counter	•	•	•	-	
H1 Version FW	•	•	•	-	
H3 Password Enable/Disable	•	-	-	-	

Copyright 2020 CAME S.p.A. – All rights reserved

INDEX

1 Introduction to GARD GT range

2 GARD GT4 - GT8 value proposition

3 GARD GT accessories

4 Price list

5 Line-up benchmark

6 Marketing Tools

7

8

Copyright 2020 CAME S.p.A. – All rights reserved

BARRIER GARD GT: Booms and Boom Accessories

803XA-0270

4,22-meter boom 90X60
For GT4

803XA-0400

4,34-meter boom 130X85
For GT8

803XA-0330

Mobile Support
for GARD GT

803XA-0440

Bracket for mobile
support and skirt

803XA-0320

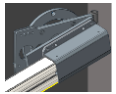

Break-Away
boom support GT4

803XA-0410

6,35-meter boom 130X85
For GT8

803XA-0340

Aluminium skirt module
L. 1720 mm

803XA-0310

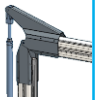

Articulated Joint
for GT4

803XA-0420

Modular boom
up to net 7.8-m for GT8

803XA-0350

Aluminium full height skirt
Module L. 1720 mm

803XA-0160 for 2-meter boom
803XA-0150 for 3-meter boom
803XA-0020 for 4-meter boom

Strip LED R/G

803XA-0390

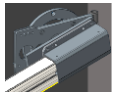

Break-Away
boom support for GT8

001G02807

Fix support

803XA-0190

Connecting kit for
Strip LED on joint boom

803XA-0240 6.5-meter boom
803XA-0550 8-meter boom

Strip LED R/G

803XA-0360

Electro block
For GT series

Copyright 2020 CAME S.p.A. – All rights reserved

803XA-0270 : **Boom 90X60 L.4220 mm (4000 mm clearance)**

White painted aluminum boom 90X60 mm, complete with LED groove cover profile and yellow shock-resistant rubber profile.

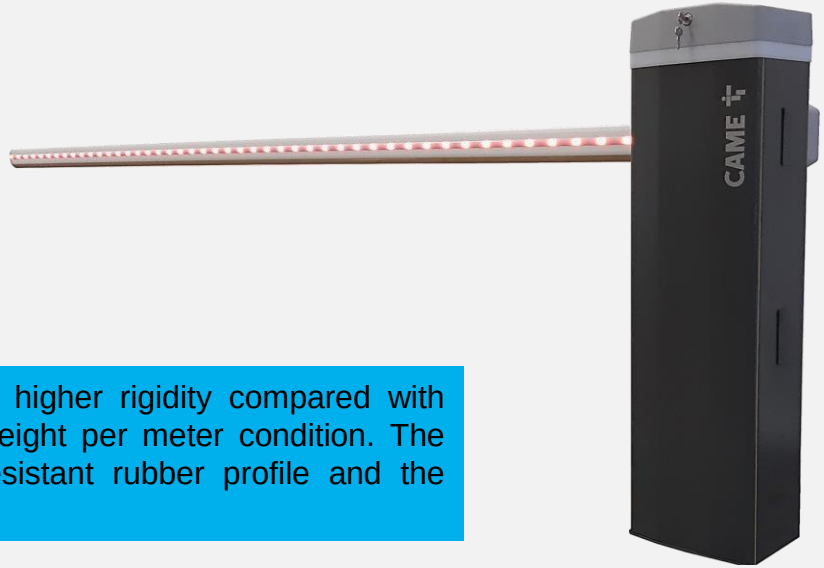

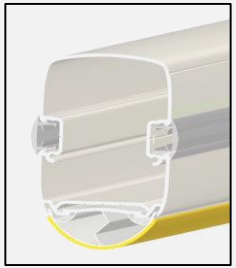

The new shape guarantees 50% higher rigidity compared with semi-elliptic boom at the same weight per meter condition. The new boom includes the shock-resistant rubber profile and the inner reinforcement.

Copyright 2020 CAME S.p.A. – All rights reserved

803XA-0320 : **Breakaway fastening for boom 90X60**

The breakaway boom system prevents breakage of important parts (e.g. chassis or gear-motor) in the event of forced or involuntary impact against the boom.

The system is complete with magnetic contact for total blocking of the movement after the impact. The barrier and its functionality can be restored manually in a short time and without the intervention by the technical service.

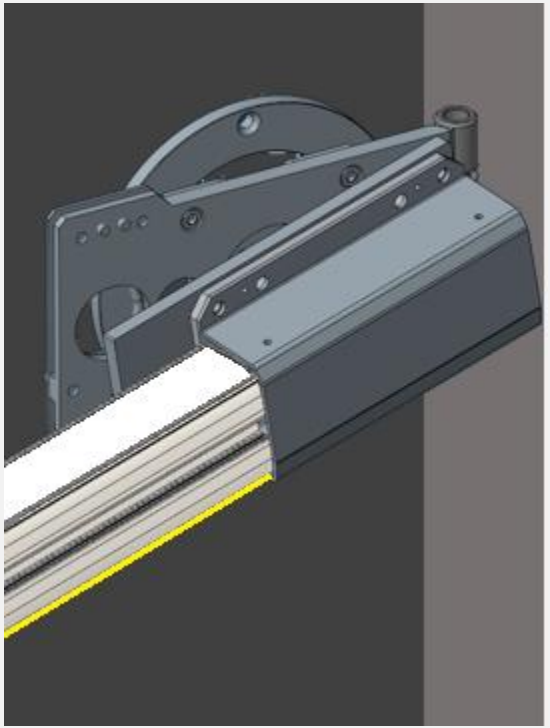

Copyright 2020 CAME S.p.A. – All rights reserved

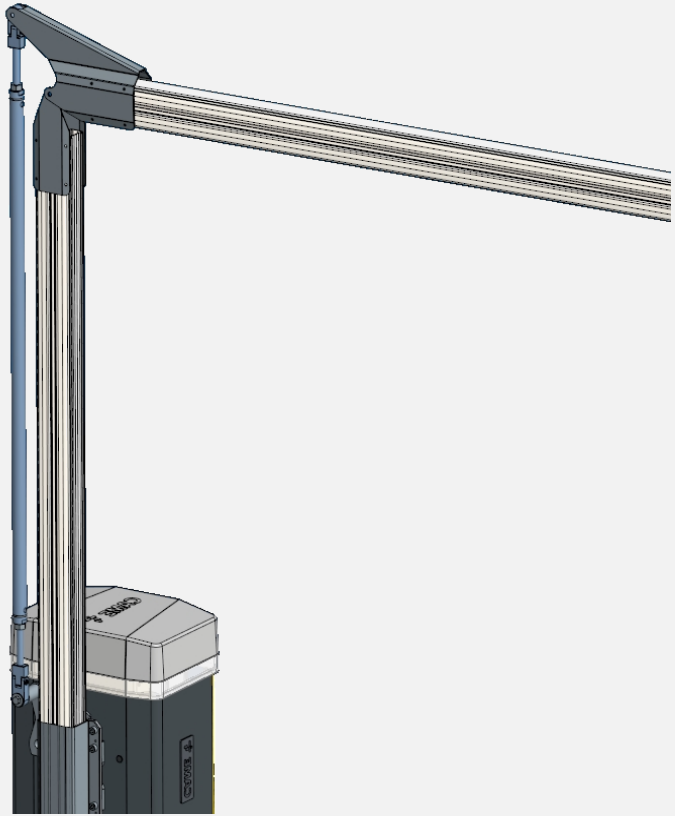

803XA-0310 : **Articulated Joint for boom 90X60**

The articulated joint is made for particular applications like underground garages. The articulation can be adapted to different sizes with a minimum tall ceiling of 2 m.

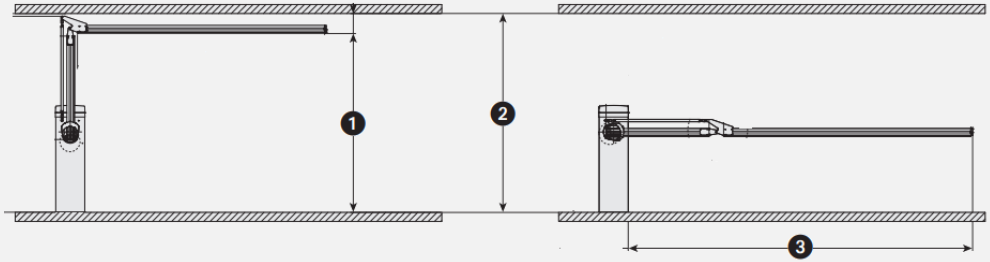

Copyright 2020 CAME S.p.A. – All rights reserved

803XA-0190 : **Connecting cable kit for strips LED**
(when applied to articulated joint).

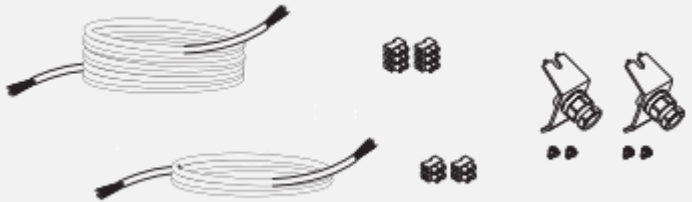

The articulated joint allows the use of strip LED on both parts of the articulation. The application consists on using one pc. of connecting cable kit with two pcs. Strip LED, to join the parts and bring power supply from the control board.

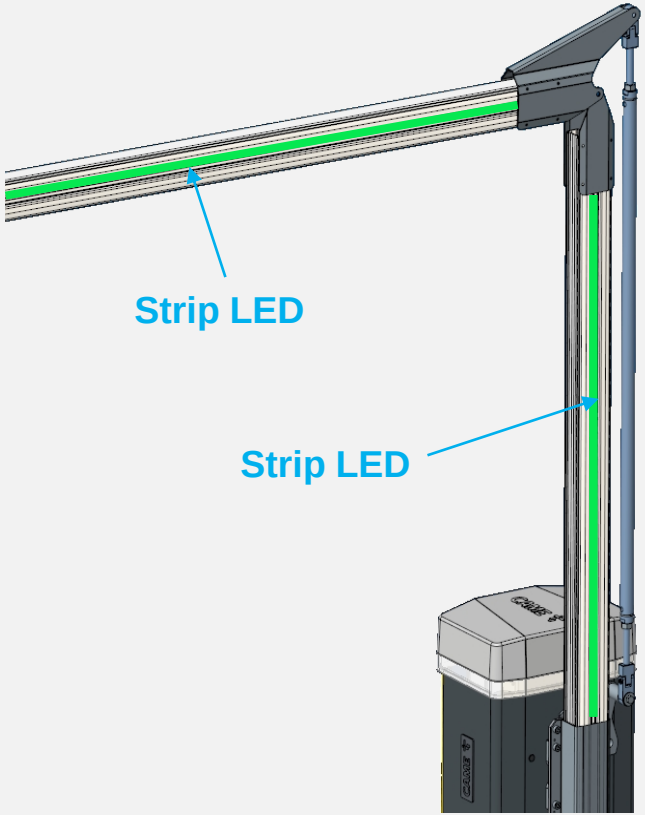

Copyright 2020 CAME S.p.A. – All rights reserved

BARRIER GARD GT8: Boom 130X85

803XA-0400: Boom 130X85 L. 4340 mm (4000 mm clearance)
803XA-0410: Boom 130X85 L. 6340 mm (6000 mm clearance)

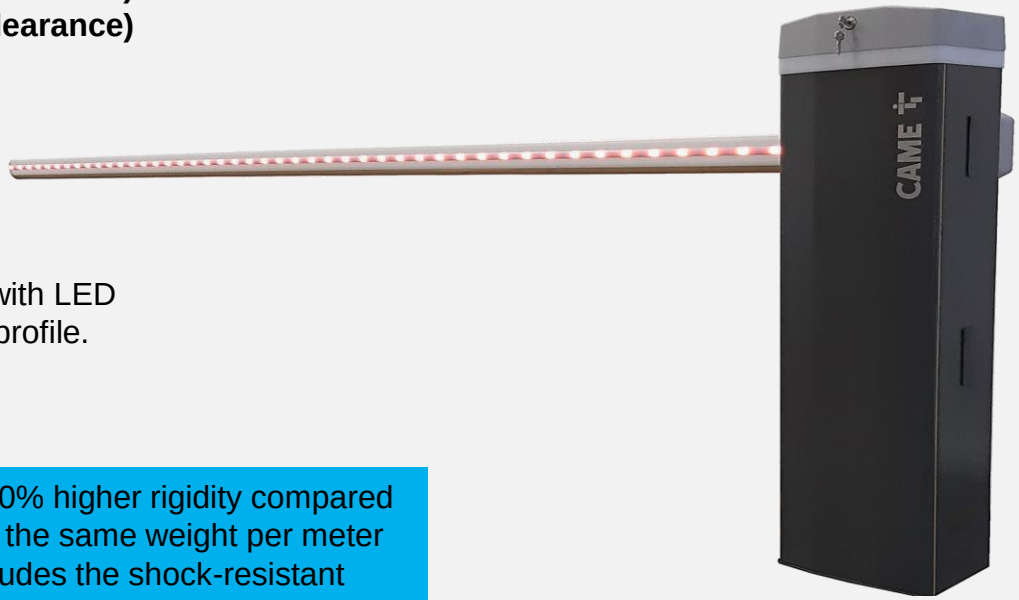

White painted aluminum boom 130X85 mm, complete with LED groove cover profile and yellow shock-resistant rubber profile.

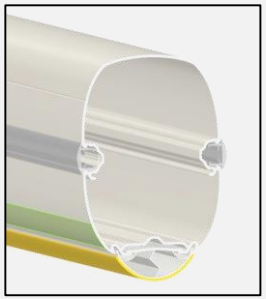

The new shape guarantees 30% higher rigidity compared with tubular 100 mm boom at the same weight per meter condition. The new boom includes the shock-resistant rubber profile and the inner reinforcement.

Copyright 2020 CAME S.p.A. – All rights reserved

803XA-0420 : **Modular Boom L. Max. 7800 mm (Clearance)**

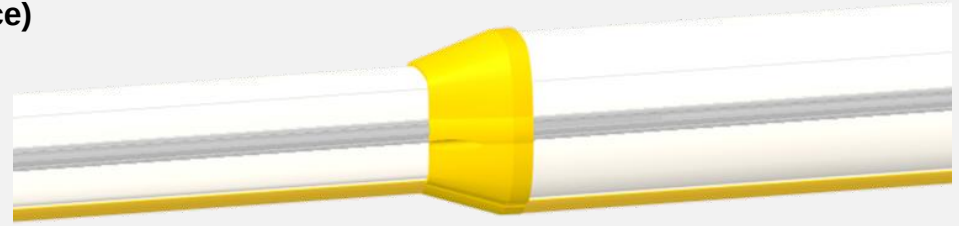

Complete set including two pieces boom (4-meter) interconnected in a telescopic solution. The **Modular system** uses a part of the 4-meter boom (small section) as a “joint” between the booms. This solution avoid the use of separate parts between booms and improves the strength.

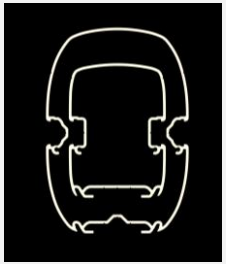

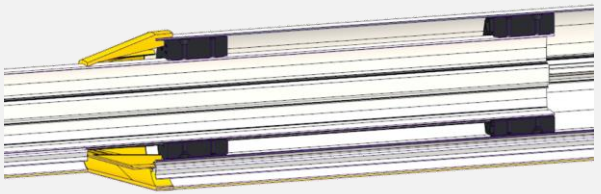

- Faster installation.
- Higher Strength.
- Less weight with minimum effort for the components.

Copyright 2020 CAME S.p.A. – All rights reserved

803XA-0390 : **Breakaway fastening for boom 130X85**

The breakaway boom system prevents breakage of important parts (e.g. chassis or gear-motor) in the event of forced or involuntary impact against the boom.

The system is complete with magnetic contact for total blocking of the movement after the impact. The barrier and its functionality can be restored manually in a short time and without the intervention by the technical service.

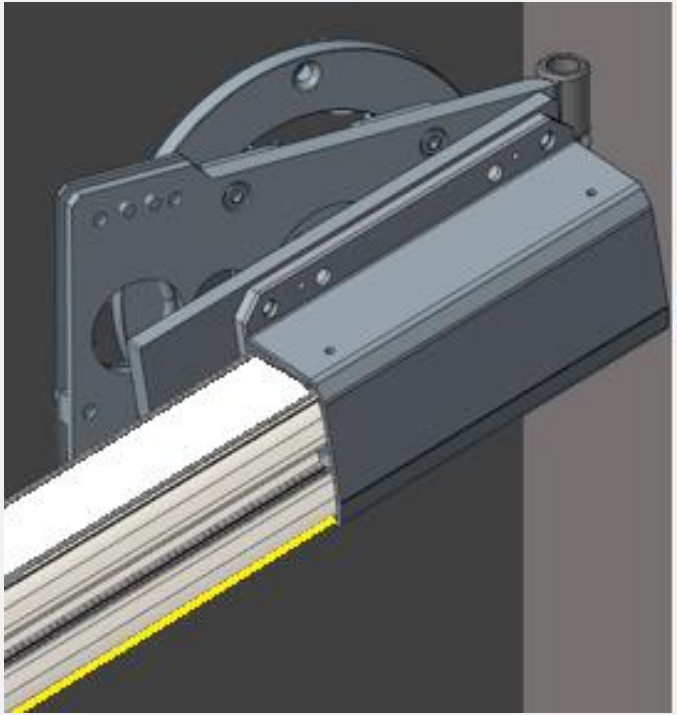

Note: the breakaway can be used up to 6-meter boom

Copyright 2020 CAME S.p.A. – All rights reserved

BARRIER GARD GT4 - GT8: Strip LED for booms

GARD GT4

803XA-0020 : **Red/Green Strip LED for boom up to 4-m long**
803XA-0150 : **Red/Green Strip LED for boom up to 3-m long**
803XA-0160 : **Red/Green Strip LED for boom up to 2-m long**

GARD GT8

803XA-0240 : **Red/Green Strip LED for boom up to 6.5-m long**
803XA-0550 : **Red/Green Strip LED for boom up to 8-m long**

Copyright 2020 CAME S.p.A. – All rights reserved

BARRIER GARD GT4 - GT8: Mobile Support

Rubber stopper

Spring

Threaded bar for height regulation

803XA-0330 : **New Mobile support**

The new mobile support is hooked directly to the lower groove and fixed without extra work to the boom.

It offers also a new spring positioning and rubber stoppers to avoid oscillations during the barrier movement.

Copyright 2020 CAME S.p.A. – All rights reserved

BARRIER GARD GT4 - GT8: Fix support

001G02807 : **New Fix Support**

The new fix support offers different regulations in way to be adapted to all the boom sections.

The sides brackets slide for a few centimetres opening the angle that hold the boom while it is closed.

Copyright 2020 CAME S.p.A. – All rights reserved

BARRIER GARD GT4 - GT8: Skirt

803XA-0340 : **Aluminium Skirt**

The new skirt is available in module with length 1721 mm. The new design features many technical improvements that reduce the fitting time for the installer and increase durability. The skirt is connected to the boom through support brackets hooked to the boom profile (strong fitting surface) and offers rubber stopper to dampen the stripes bending while opening. Two connection brackets are included on each module.

Connection Brackets between modules

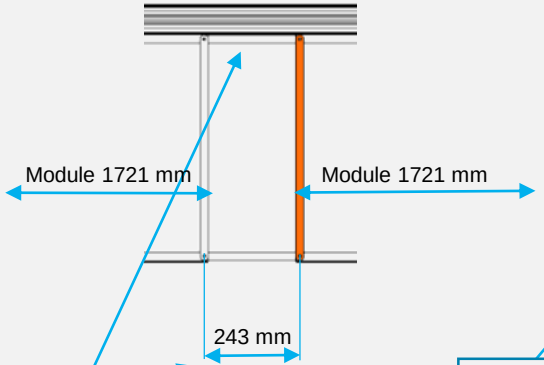

Rubber stopper

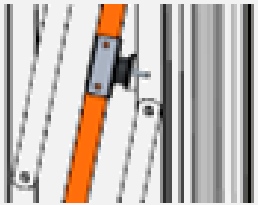

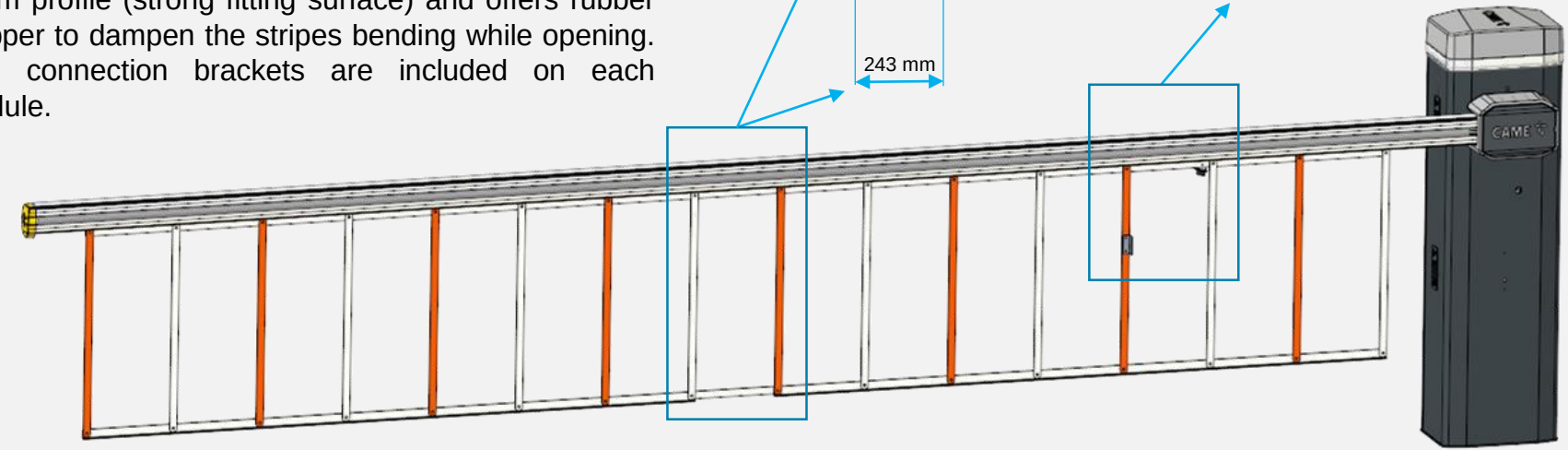

Copyright 2020 CAME S.p.A. – All rights reserved

BARRIER GARD GT4 - GT8: Full Height Skirt

803XA-0350 : **Full Height Aluminium Skirt**

The Full Height Skirt is available in module with length 1721 mm up to 1,3-meter height. The new design features many technical improvements that reduce the fitting time for the installer and increase durability. The skirt is connected to the boom through support brackets hooked to the boom profile (strong fitting surface) and offers rubber stopper to dampen the stripes bending while opening. The full height skirt is particularly used to control entrances that require prevention of unauthorized vehicle and pedestrian accesses. Two connection brackets are included on each module.

Rubber stopper

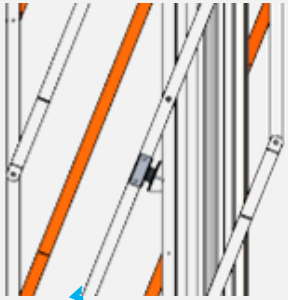

Max. number of modules:
2 pcs. For GARD GT4 with 4-meter boom
3 pcs. For GARD GT8 with 6-meter boom

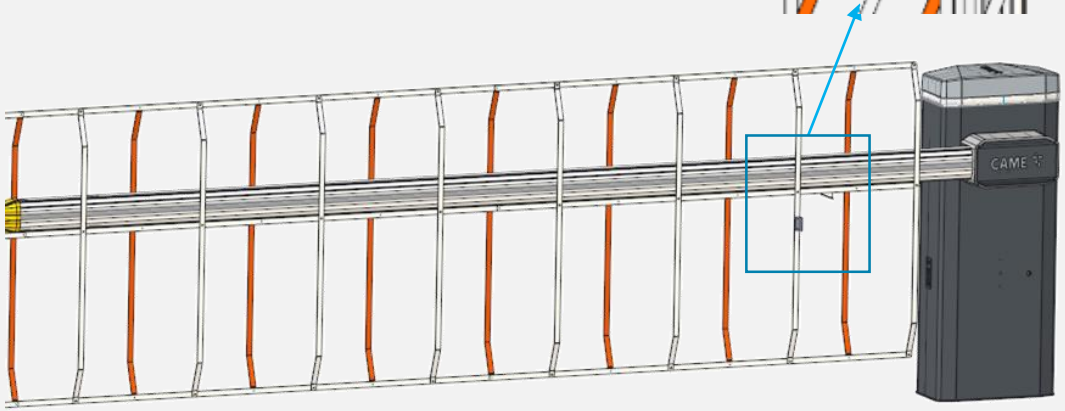

Note: the full height skirt cannot be used with modular boom **803XA-0420**

Copyright 2020 CAME S.p.A. – All rights reserved

BARRIER GARD GT4 - GT8: Bracket for mobile support and skirt

803XA-0440 : **Bracket for mobile support and skirt**

The hooking bracket allows the use of mobile support and skirt simultaneously.

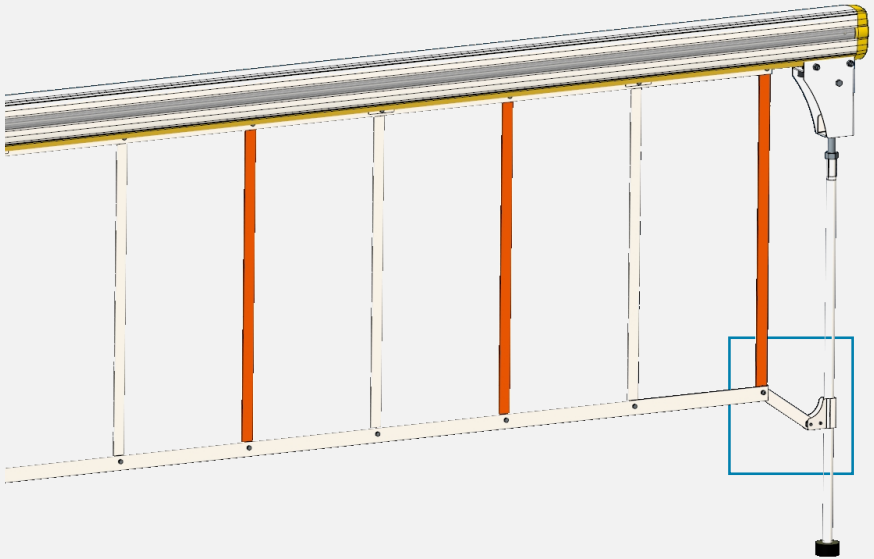

Copyright 2020 CAME S.p.A. – All rights reserved

BARRIER GARD GT4 - GT8: Magnetic Lock

803XA-0360 : **Magnetic Lock for boom and fix support**

The new fix support also offers the possibility to install a magnetic lock to hold the boom in closed position and prevent damages in case of forcing.

The lock, positioned on the fix support is controlled directly by the ZL392 output EB-EB without using any additional electronic equipment. Holding Force: 250kg

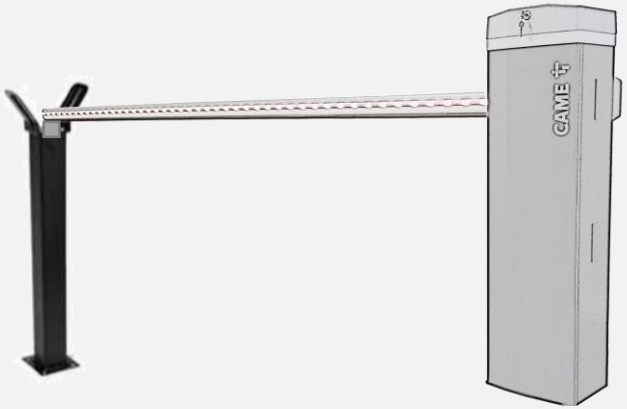

Copyright 2020 CAME S.p.A. – All rights reserved

BARRIER GARD GT: Complementary Accessories

803XA-0280

R/G LED Crown for GT4

803XA-0430

R/G LED Crown for GT8

803BB-0370

Battery charger set for GT8

806SA-0110

CAME KEY

803XA-0300

Auxiliary neutral Contacts GT4

009SMA

2 Channels Magnetic Loop Detector

806XG-0030

Laser Sensor

806SA-0140

CAME Wi-Fi - Bt

803XA-0380

Auxiliary neutral Contacts For GT8

009SMA2

1 Channel Magnetic Loop Detector

806XG-0040

Power Unit for Laser Sensor

806SA-0160

I/O Board for PKR systems

001PSRT01

Heater for workin Conditions up to -40°

806XG-0050

Bracket for Laser Sensor

803XC-0020

Bridge Modbus

803BB-0290

Battery charger set for GT4

Copyright 2020 CAME S.p.A. – All rights reserved

BARRIER GARD GT4 – GT8: Red/Green LED Crown

803XA-0280 : **Red/Green LED Crown for GT4.**

803XA-0430 : **Red/Green LED Crown for GT8.**

Copyright 2020 CAME S.p.A. – All rights reserved

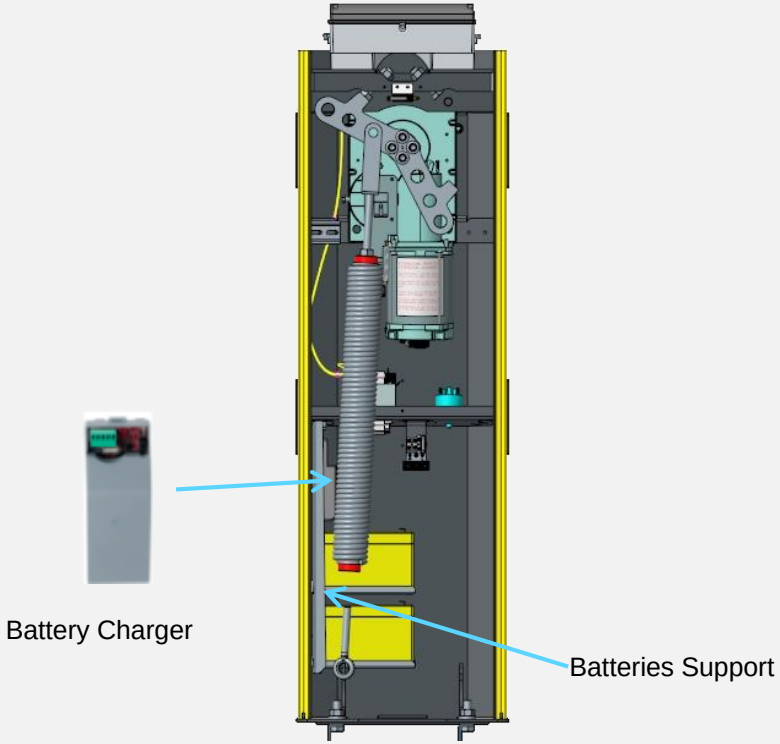

803XA-0290 : **Battery Charger Set**.
It contains the charger and the brackets for two pcs. 7Ah batteries (not included).

By the function F93 is possible to set different working mode:

F93= OFF Standard functionally.
F93= 1 The barrier opens automatically when the main power is off and all commands are disabled until the main power is back.

Copyright 2020 CAME S.p.A. – All rights reserved

BARRIER GARD GT4: Contacts Kit for boom position

803XA-0300 : **Auxiliary contacts kit.**

The kit allows an easy integration with system, such as Parking or Access Control, that require a neutral contact to feed-back the boo position.

The micro-switches are installed on a support bracket and get activated by the cam mounted on the slow shaft.

Contact Max. 24V 1A

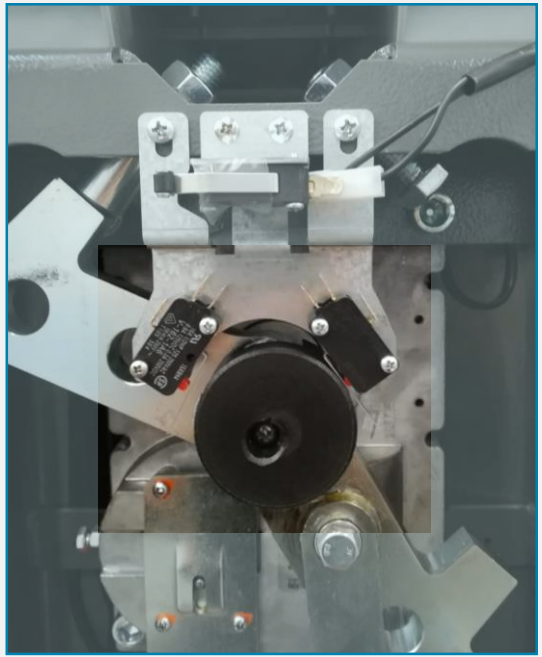

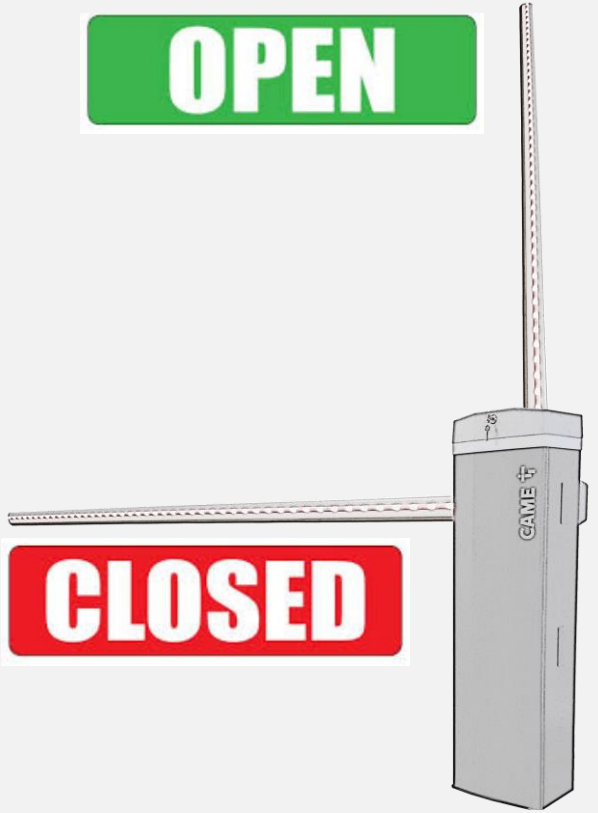

Copyright 2020 CAME S.p.A. – All rights reserved

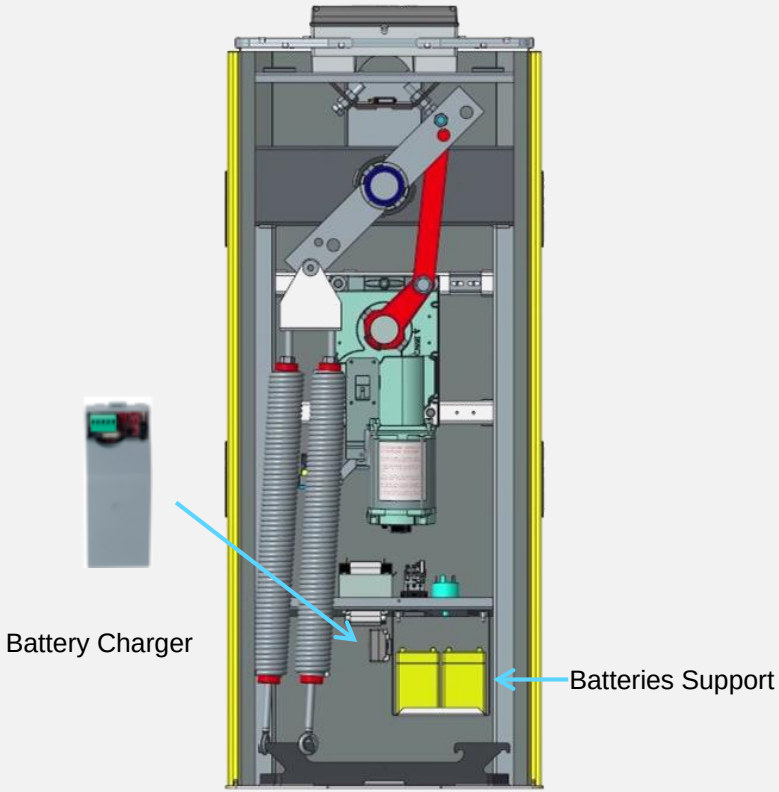

803XA-0370 : **Battery Charger Set**.
It contains the charger and the brackets for two pcs. 7Ah batteries (not included).

By the function F93 is possible to set different working mode:

F93= OFF Standard functionally.
F93= 1 The barrier opens automatically when the main power is off and all commands are disabled until the main power is back.

Copyright 2020 CAME S.p.A. – All rights reserved

BARRIER GARD GT8: Contacts Kit for boom position

803XA-0380 : **Auxiliary contacts kit**.

The kit allows an easy integration with system, such as Parking or Access Control, that require a neutral contact to feed-back the barrier position.

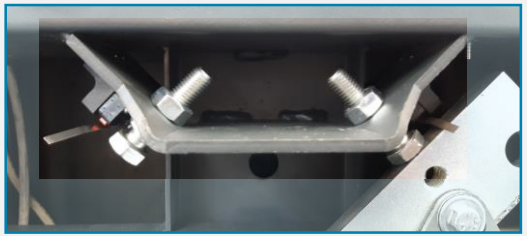

The micro-switches are installed on a support bracket and get activated by the transmission lever.
Contact Max. 24V 1A

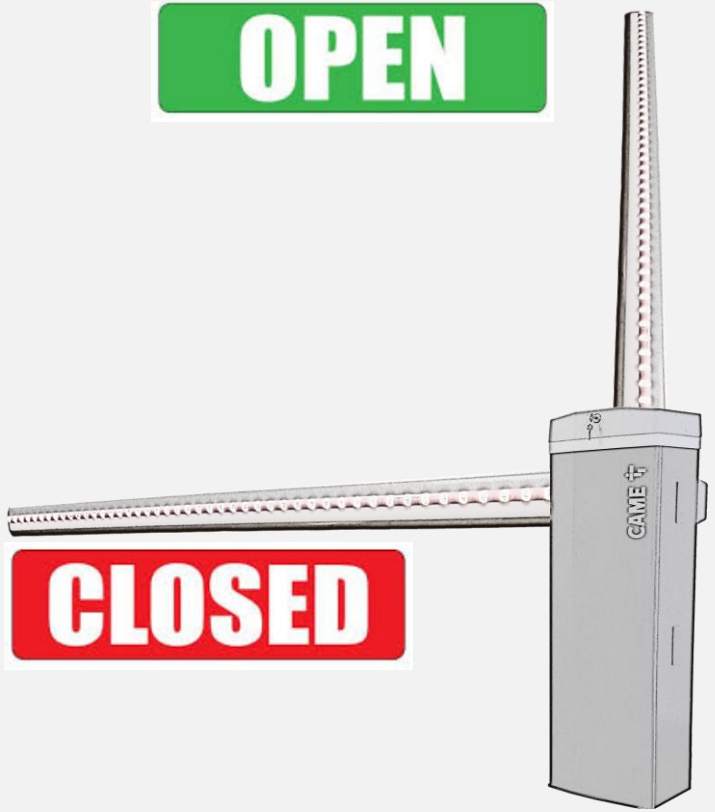

Copyright 2020 CAME S.p.A. – All rights reserved

BARRIER GARD GT4 - GT8: CAME KEY

806SA-0110: **CAME KEY**

The **GARD GT** series features native slot for CAME Key compatibility and offers many advantages for the installer.

Product Features:

- The installer will use the **Came Key** to connect his own smartphone to the control board by local connection (Wi-Fi).
- Thanks to the Came **SetUp App**, the setting and the maintenance of the operators will be easy, intuitive and fast.
- Each installer can **backup the setting** on the cloud Came Connect and retrieve them at any time from any smartphone.

Copyright 2020 CAME S.p.A. – All rights reserved

BARRIER GARD GT4 - GT8: CAME GATEWAY Wi-Fi

806SA-0140: **CAME GATEWAY WIFI**

The **GARD GT** series features native slot for CAME Gateway Wi-Fi and offers many advantages for the installer.

Product Features:

The **Gateway Wi-Fi** is a device that allows to connect the automation to your home router and explore all the potential of the Came Connect cloud.

The device allows you to control the automation through the **APP Automation** for opening and closing commands.

CAME GATEWAY WIFI is **compatible with Alexa**, so you just need to give a vocal command to open, close or ask for the status of your automation.

If a Wi-Fi network is not available, the device can be set as a **Bluetooth selector** allowing you to operate the automation locally with the App AutomationBT.

Copyright 2020 CAME S.p.A. – All rights reserved

BARRIER GARD GT4 - GT8: Bridge TCP Modbus

803XC-0020: Bridge Modbus TCP

The control board ZL392 offers native RS485 with Modbus open protocol **for third party integration**. The bridge converts the RS485 to TCP signal. Available on docs.came.com the register map for system integrators.

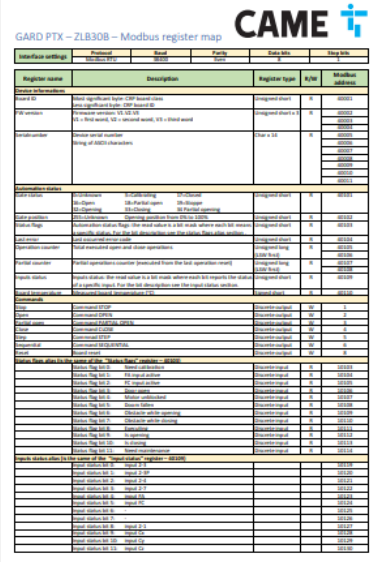

GARD PTX – ZLB30B – Modbus register map

Interface settings	Protocol	Baud	Parity	Data bits	Stop bits
	Modbus RTU	38400	None	8	1

Register name	Description	Register type	R/W	Modbus address
Device information				
Board ID	Most significant byte: CRP board class Less significant byte: CRP board ID	Unsigned short	R	40001
FW version	Firmware version: V1.V2.V3 V1 = first word, V2 = second word, V3 = third word	Unsigned short x 3	R	40002 40003 40004
Serialnumber	Device serial number String of ASCII characters	Char x 16	R	40005 40006 40007 40008 40009 40010 40011
Automation status				
Gate status	0=Unknown 5=Calibrating 17=Closed 16=Open 18=Partial open 19=Stopped 32=Opening 33=Closing 34=Partial opening	Unsigned short	R	40101
Gate position	0%=Unknown Opening position from 0% to 100%	Unsigned short	R	40102
Status flags	Automation status flags: the read value is a bit mask where each bit means a specific status. For the bit description see the status flags also section	Unsigned short	R	40103
Last error	Last occurred error code	Unsigned short	R	40104
Operation counter	Total executed open and close operations	Unsigned long 0.5W first	R	40105 40106
Partial counter	Partial operations counter (executed from the last operation reset)	Unsigned long 0.5W first	R	40107 40108
Inputs status	Inputs status: the read value is a bit mask where each bit reports the status of a specific input. For the bit description see the input status section.	Unsigned short	R	40109
Board temperature	Measured board temperature (°C)	Signed short	R	40110
Commands				
Stop	Command STOP	Discrete output	W	1
Open	Command OPEN	Discrete output	W	2
Partial open	Command PARTIAL OPEN	Discrete output	W	3
Close	Command CLOSE	Discrete output	W	4
Stop	Command STOP	Discrete output	W	5
Sequential	Command SEQUENTIAL	Discrete output	W	6
Reset	Board reset	Discrete output	W	8
Status flags alias (is the same of the "Status flags" register – 40109)				
	Status flag bit 0: Need calibration	Discrete input	R	10101
	Status flag bit 1: Fit input active	Discrete input	R	10102
	Status flag bit 2: FC input active	Discrete input	R	10103
	Status flag bit 3: Door open	Discrete input	R	10104
	Status flag bit 4: Motor unblocked	Discrete input	R	10107
	Status flag bit 5: Doors failure	Discrete input	R	10108
	Status flag bit 6: Obstacle while opening	Discrete input	R	10109
	Status flag bit 7: Obstacle while closing	Discrete input	R	10110
	Status flag bit 8: Everything	Discrete input	R	10111
	Status flag bit 9: Is opening	Discrete input	R	10112
	Status flag bit 10: Is closing	Discrete input	R	10113
	Status flag bit 11: Need maintenance	Discrete input	R	10114
Inputs status alias (is the same of the "Input status" register – 40109)				
	Input status bit 0: Input 2-3			10118
	Input status bit 1: Input 2-SP			10120
	Input status bit 2: Input 2-4			10121
	Input status bit 3: Input 2-7			10122
	Input status bit 4: Input FA			10123
	Input status bit 5: Input FC			10124
	Input status bit 6: -			10125
	Input status bit 7: -			10126
	Input status bit 8: Input 2-1			10127
	Input status bit 9: Input Cx			10128
	Input status bit 10: Input Cy			10129
	Input status bit 11: Input Cz			10130

Copyright 2020 CAME S.p.A. – All rights reserved

BARRIER GARD GT4 - GT8: Magnetic Loop Detectors

009SMA/009SMA2: Magnetic Loop Detector 1 or 2 channels

The magnetic loop Detector is commonly used to detect presence and give opening commands or act as safety and reclose signal. Available one channel or double channel powered 24V.

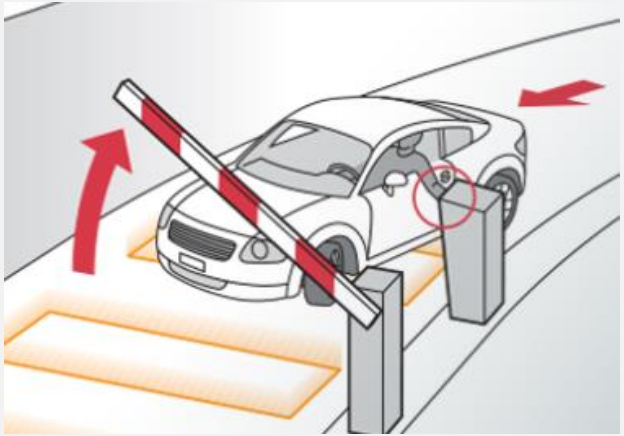

Copyright 2020 CAME S.p.A. – All rights reserved

BARRIER GARD GT4 - GT8: Input Output board

806SA-0160 : **I/O board** **Work in Progress**

The **I/O board** can be used as an optional in case the GARD GT barrier needs to be installed **with PARKARE PARKING SYSTEM**. The board offers 7 neutral outputs for barrier feed-back and two digital inputs for OPEN and CLOSE separate commands. It can be connected directly to RSE 2 and be set as CRP by F49.

Function of the outputs of the RS485 I/O board *

1. Contact output indicating obstacle detection indication
2. Contact output indicating open boom
3. Contact output indicating closed boom
4. Contact output indicating boom drop-away
5. Open inspection hatch signal contact output
6. Released gearmotor signal contact output
7. CX input status signal contact output
8. Input for the connection of a button with OPEN ONLY function (COM-N1)
9. Input for the connection of a button with CLOSE ONLY function (COM-N2)

Each output is a clean contact (NO) with maximum capacity 1A – 24 V DC.

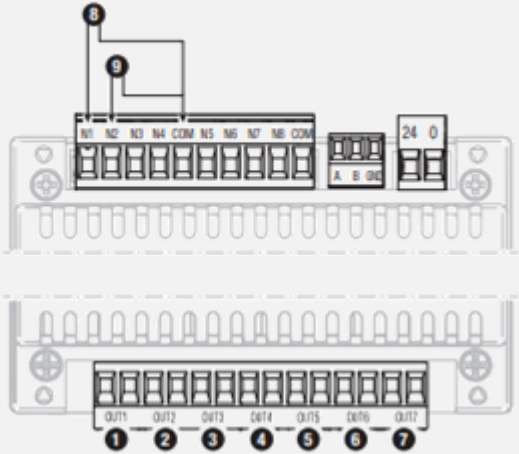

Copyright 2020 CAME S.p.A. – All rights reserved

BARRIER GARD GT4 - GT8: Heater Kit

001PSRT01: **Heater kit**

Thermal heater 80W for GARD GT series. Includes thermostat and allows optimal working conditions **up to -40° C**

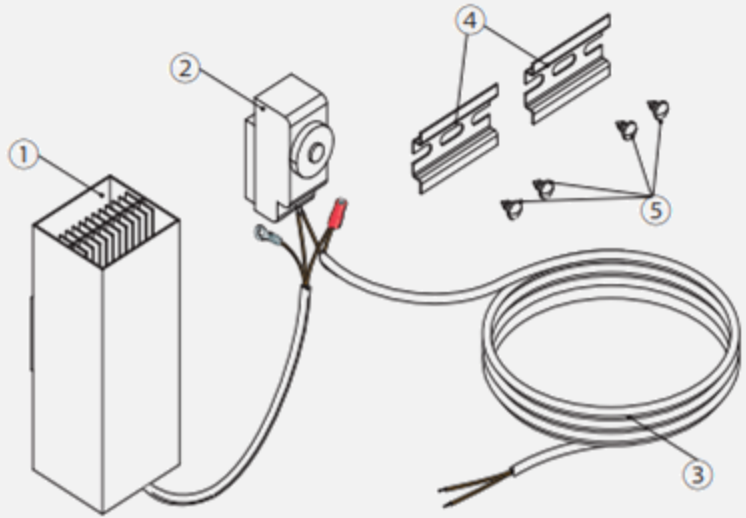

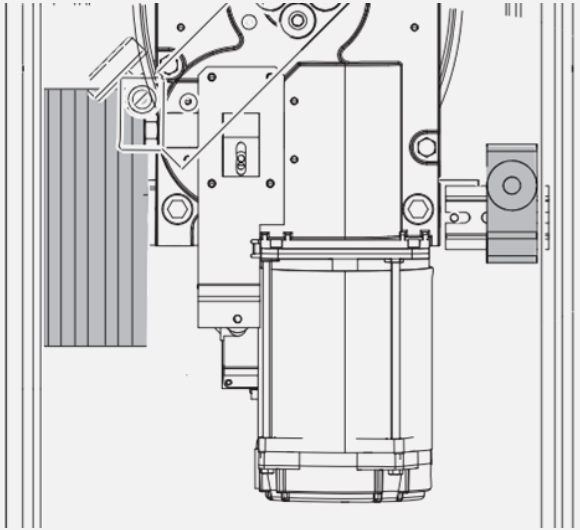

Copyright 2020 CAME S.p.A. – All rights reserved

BARRIER GARD GT4 - GT8: Laser Sensor

806XG-0030: **Laser sensor**

The Laser sensors is an accessory certified **EN ISO 13849-1 (PI "d" CAT 2); EN 12978; EN 12453 (Device E).**
It is used to satisfy the most exigent cases when it is not possible to perform impact tests required by the Norms.
The ZL392 control board offers safety test for inputs that allow the use of such important safety devices.

806XG-0030
Laser sensor

806XG-0040
Power unit

806XG-0050
Bracket

Copyright 2020 CAME S.p.A. – All rights reserved

INDEX

1 Introduction to GARD GT range

2 GARD GT4 - GT8 value proposition

3 GARD GT accessories

4 Price list

5 Line-up benchmark

6 Marketing Tools

7

8

Copyright 2020 CAME S.p.A. – All rights reserved

GARD GT RANGE

Export Price List L22

SAP Code	Description SAP	Price L22 2020	For sale
803BB-0160	GGT40AGS GARD GT4 BARR 230V 24V	1.598,00 €	Yes
803BB-0180	GGT80AGS GARD GT8 BARR 230V 24V	1.865,00 €	No
803BB-0200	GGT40RGS GARD GT4 BARR 120V 24V	1.598,00 €	Yes
803BB-0220	GGT80RGS GARD GT8 BARR 120V 24V	1.865,00 €	No
803BB-0240	GGT40AX4 GARD GT4 BARR 230V 24V SS4	2.685,00 €	No
803BB-0250	GGT80AX4 GARD GT8 BARR 230V 24V SS4	3.190,00 €	No
803BB-0260	GGT40AX6 GARD GT4 BARR 230V 24V SS6	3.545,00 €	No
803BB-0270	GGT80AX6 GARD GT8 BARR 230V 24V SS6	4.100,00 €	No
803BB-0280	GGT40ACS GARD GT4 BARR 230V 24V RALX	1.995,00 €	Yes
803BB-0290	GGT80ACS GARD GT8 BARR 230V 24V RALX	2.260,00 €	No
803BB-0300	GGT40RX4 GARD GT4 BARR 120V 24V SS4	2.685,00 €	No

Note: the balancing springs are included
GT4 Qty. pallet 8 pcs.
GT8 Qty. pallet 4 pcs.

Copyright 2020 CAME S.p.A. – All rights reserved

GARD GT RANGE

Export Price List L22

GT4 Accessories			
Code	SAP Description	Price L22 2020	For sale
803XA-0280	LUMINOUS CROWN LED R/G GARD GT4	88,00 €	Yes
803XA-0270	BOOM 90X60 L=4220 MM	198,00 €	Yes
803XA-0320	BREAKAWAY FASTENING FOR BOOM 90X60	Work in progress	No
803XA-0310	ARTICULATED JOINT FOR BOOM 90X60	Work in progress	No
803XA-0020	LED STRIP FOR 4M BOOM	120,00 €	Yes
803XA-0150	LED STRIP FOR 3M BOOM	110,00 €	Yes
803XA-0160	LED STRIP FOR 2M BOOM	90,00 €	Yes
803XA-0300	GARD GT4 AUX.CONTACTS FOR BOOM POSITION	50,00 €	Yes
803XA-0290	GARD GT4 BATTERY CHARGER SET	118,00 €	Yes
803XA-0190	KIT CONNECTION FOR STRIP LED FOR JOINT	68,3 €	Yes
GT8 Accessories			
Code	SAP Description	Price L22 2020	For sale
803XA-0370	GARD GT8 BATTERY CHARGER SET	Work in progress	No
803XA-0380	GARD GT8 AUX.CONTACTS FOR BOOM POSITION	Work in progress	No
803XA-0390	BREAKAWAY FASTENING FOR BOOM 130X85	Work in progress	No
803XA-0400	BOOM 130X85 L=4340 MM	228,00 €	No
803XA-0410	BOOM 130X85 L=6350 MM	330,00 €	No
803XA-0420	MODULAR BOOM FOR GARD GT8	410,00 €	No
803XA-0240	LED STRIP FOR 6,5M BOOM	200,00 €	Yes
803XA-0250	LED STRIP FOR 8M BOOM	225,00€	Yes
803XA-0430	LUMINOUS CROWN LED R/G GARD GT8	98,0 €	No

Copyright 2020 CAME S.p.A. – All rights reserved

GARD GT RANGE

Export Price List L22

Common Accessories			
Code	SAP Description	Price L22 2020	For sale
001G02807	FIXED SUPPORT FOR BOOM	87,20 €	Yes
803XA-0330	MOBILE SUPPORT FOR BOOMS 90X60 130X85	118,00 €	Yes
803XA-0340	SKIRT FOR BOOM 90X60 130X85	168,00 €	No
803XA-0360	MAGNETIC LOCK FOR BOOM AND FIX SUPPORT	Work in progress	No
803XA-0350	FULL HEIGHT SKIRT FOR BOOM 90X60 130X85	285,00 €	No
806SA-0160	I/O BOARD	Work in progress	No
803XC-0020	BRIDGE MODBUS TCP/RTU GARD P	380,00 €	Yes
001PSRT01	HEATER KIT WITH THERMOSTAT	374,70 €	Yes
806XG-0030	LASER SENSOR FOR BARRIERS	1.785,71 €	Yes
806XG-0040	POWER UNIT FOR LASER SENSOR	148,81 €	Yes
806XG-0050	BRAKET FOR LASER SENSOR	89,29 €	Yes
803XA-0440	BRACKET FOR MOBILE SUPPORT AND SKIRT	49,00 €	No

Copyright 2020 CAME S.p.A. – All rights reserved

INDEX

1 Introduction to GARD GT range

2 GARD GT4 - GT8 value propositions

3 GARD GT accessories

4 Price list

5 Line-up benchmark

6 Marketing Tools

7

8

Copyright 2020 CAME S.p.A. – All rights reserved

GARD GT4 RANGE

Line up Benchmark barriers up to 4-meter boom

Brand	Model	Speed	MCBF [Mil]	Duty cycle	Design	Cabinet	S Steel	Barrier light	Boom light
CAME	GARD GT4	2-4.0 s	3	Intensive use 300 Cycle/h	****	Galvanized Steel	Y	Integrated	R/G
BFT	GIO. BT A 30U	4.0 s	N.A.	Semi-intensive	**	N.A.	N	N	Y / White
BFT	MOOVI 30	4.0 s	N.A.	Semi-intensive	*	N.A.	Y	N	Y / White
NICE	WIDES	4.0 s	0.5	100 Cycle/h	**	Galvanized Steel	Y	N	Y / (White)
NICE	S4BAR	4.0 s	0.5	100 Cycle/h	***	Galvanized Steel	Y	Integrated	Y / (White)
FAAC	B614	2-4.0 s	0.5	Continuous service	***	Galvanized Steel	N	Integrated	Y / (White)
ROGER	BIONIK 4	3-6.0 s	N.A	100%	**	Galvanized Steel	N	Integrated	Y / (White)

Copyright 2020 CAME S.p.A. – All rights reserved

GARD GT8 RANGE

Line up Benchmark barriers up to 8-meter boom

GT8

Brand	Model	Speed	MCBF [Mil]	Duty cycle	Design	Cabinet	S Steel	Barrier light	Boom light
CAME	GARD GT8	4-8.0 s	3	Intensive use 180 Cycle/h	****	Galvanized Steel	Y	Integrated	R/G
BFT	MICHELANGELO BT A 80	8 s	N.A.	Intensive	**	N.A.	N	Integrated	Y / White
BFT	MOOVI 60	8.0 s	N.A.	Semi-intensive	*	N.A.	Y	N	Y / White
NICE	M7BAR	6-10 s	~ 2	200 Cycle/h	***	Galvanized Steel	N	Y	Y / (White)
NICE	L9BAR	8-12 s	~ 2	150 Cycle/h	***	Galvanized Steel	N	Y	Y / (White)
NICE	WIDE L	4.0 s	0.5	200 Cycle/h	***	Galvanized Steel	Y	N	Y / (White)
FAAC	B680H	4-6 s	2	100%	***	Galvanized Steel	N	Integrated	Y / (White)
ROGER	BIONIK 8	9.0 s	N.A	Heavy Duty	**	Galvanized Steel	N	Integrated	Y / (White)
LBA	LBA 7	5.0 s	N.A	N.A.	**	Aluminum	N	N	Y / (White)

Copyright 2020 CAME S.p.A. – All rights reserved

INDEX

1 Introduction to GARD GT range

2 GARD GT4 - GT8 value proposition

3 GARD GT accessories

4 Price list

5 Line-up benchmark

6 Marketing Tools

7

8

Copyright 2020 CAME S.p.A. – All rights reserved

GARD GT: MARKETING TOOLS

What will be available:

Toolbox:

Leaflet for GARD GT4
Leaflet for GARD GT8
Landing page GT4 for website
Landing page GT8 for website
Post for social media
Page advertising
Pictures
Video Clips
3D render

Copyright 2020 CAME S.p.A. – All rights reserved

The content of these slides (hereinafter “Content”) is protected under Italian laws regarding IPR and shall have to be used exclusively for internal, not commercial, use by third parties to whom such Content has been shown during products introduction, training courses, or for other purposes anyway related to the business of CAME S.p.A. or companies belonging to the group CAME (hereinafter “CAME”).
Therefore such third parties shall not have the right to assign or disclose such Content through any mass media or in a public way whatsoever, being understood that the use of such information is authorized for internal purposes only.
It is expressly forbidden to copy and to disclose the Content through any means whatsoever (electronic, mechanical, copies) for purposes different from those authorized herein.
Even if the Content has been obtained from reliable sources CAME does not warrant and shall not be responsible in anyway whatsoever regarding the correctness, sufficiency and completeness of the Content.

Copyright 2020 CAME S.p.A.
All rights reserved

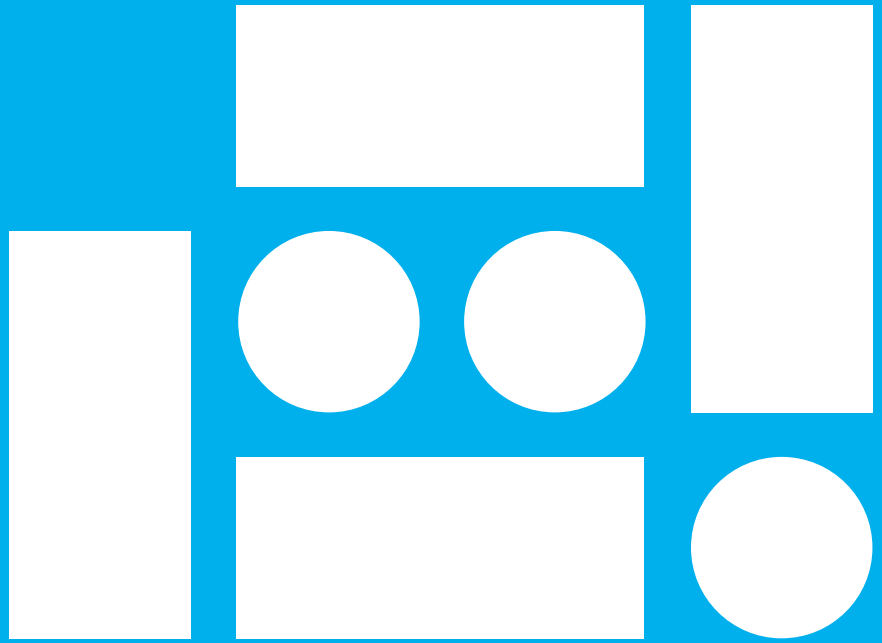

THANKS FOR YOUR KIND ATTENTION

Copyright 2020 CAME S.p.A.
All rights reserved

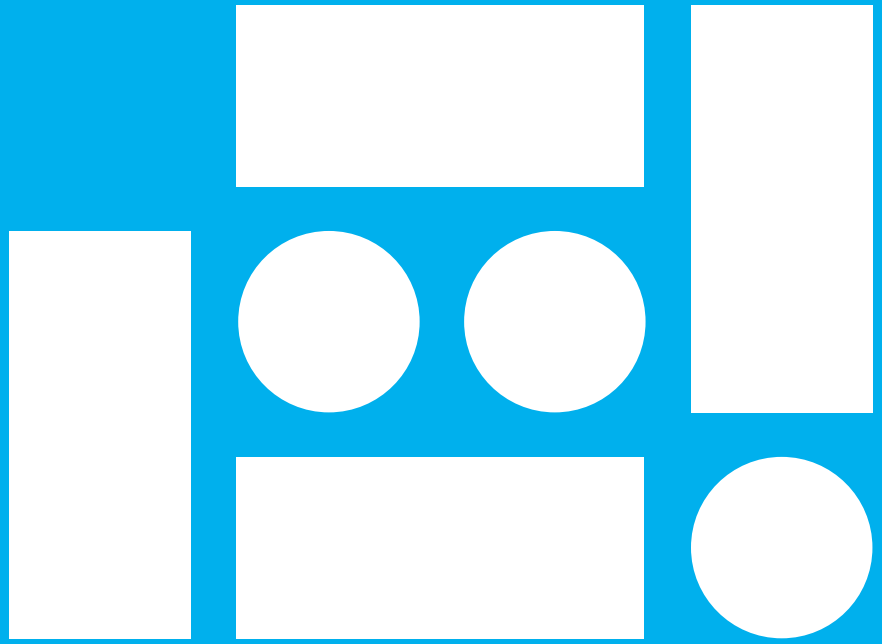

CAME S.p.A.
Via Martiri della Libertà 15
31030 Dosson di Casier (TV)
T 0422 49 40
F 0422 49 41